Orbital
Innovation You Can Count On®

RSDO Rapid III 300S Specification/Data Sheet

Orbital's GD-300S (300S) spacecraft supports science and technology demonstration/validation missions requiring high performance with a one to three year mission life. The 300S provides high accuracy pointing, rapid slewing, and moderate data rates. Multiple instruments can be accommodated on a single flight. A wide variety of configurations, mission attitudes, and launch vehicles have been flown. The 300S core RAD-750/cPCI-based architecture provides the power and flexibility for demanding missions at an affordable price.

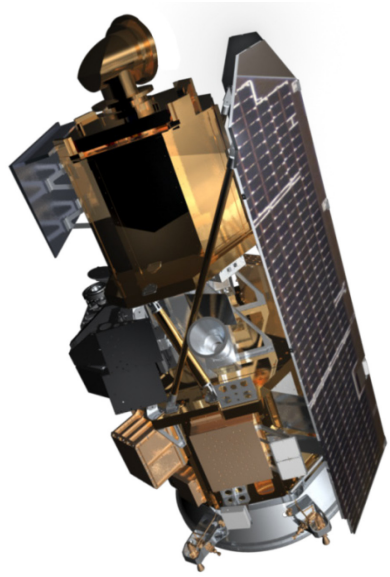

300S Core Flight Configuration

Highlights & Features:

- Architecture is Applicable to Low Earth Orbit High Demo Missions
- Highly Agile Pointing
- Designed for Orbit Raising and Lowering
- AFSCN SGLS or NASA GN Command and Control Can be Accommodated
- Single String and Selective Redundancy
- Extensive Flight Heritage
  - 7 Missions Launched: NFIRE, C/NOFS, RHESSI, MightySat II.1, MSTI-1, 2, and 3
- High Capacity Avionics Architecture Supports Medium Data Rates with Accurate Pointing, Orbit Knowledge, and Timing
- Demonstrated Contamination Control Processes for Sensitive Instruments
- Compatible with Small Launch Vehicles

Core Spacecraft Performance Parameters	
Parameter	**Performance**
Spacecraft Dry Mass	272 kg
Propellant Load	39 kg
Spacecraft Bus Voltage	25-34 V
Orbit Knowledge	33 m, 1σ
Pointing Knowledge	5 arc sec, 1σ
Pointing Control	120 arc sec, 1σ
Max. Maneuver Rate	3 deg/sec
Timing Accuracy	40 μs
Total Radiation Dose	25 krad
Spacecraft Ps @ 2 years	0.728
Core Payload Accommodation Parameters	
Parameter	**Performance**
Instrument Mass	65 kg
Instrument OAP	125 W
Instrument Data Storage	160 Gb
Achievable Downlink Rate	40 Mbps

Payload Digital Interfaces

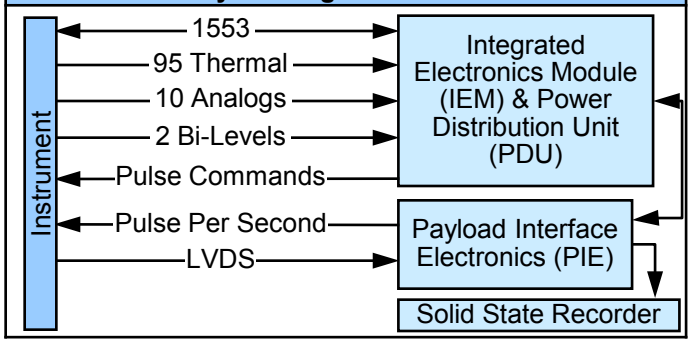

- Based on the NFIRE spacecraft
- Orbital's 300S spacecraft utilizes a mature low-risk flight-proven design with established vendor sources
- 300S is a selectively-redundant, 3-axis stabilized spacecraft intended for missions with a 1-3 year nominal duration
- 300S spacecraft have supported a wide variety of NASA and DoD missions

300S Additional Capabilities

In addition to our Core 300S Rapid III capabilities, we have demonstrated the capabilities shown below in other 300S missions. Some of these capabilities would require additional funding or schedule adjustments to our Baseline Rapid III offering.

Additional Capabilities or Options
50+ Mbps X-band Space-ground Mission Data Link
Increased Mission Data Storage
Increased Redundancy for Longer Design Life
Structure Can be Tailored to Suit Mission, Instrument, and LV Needs
Extremely EMI-quiet Configurations for Ionospheric Science or Other Applicable Missions have been Delivered
Provision for On-Orbit Operations Using Orbital's Mission Operations Centers (Rapid-III Contract Option)
Variety of Configurations Possible to Support Other Orbits and Missions
Propellant Capacity can be Adjusted by Tailoring Fill Fraction or Changing to a Larger Tank

300S Specification/Data Sheet

Orbital
Innovation You Can Count On®

Mission Heritage

300S spacecraft have successfully flown Space Science, Earth Science, and Technology Demonstration missions. The 300S has flown in several configurations including agile, inertially pointing and tracking applications. It has also been configured in an extremely EMI quiet design for the C/NOFS mission. All 300S successfully completed their objectives or are continuing well beyond their required mission lifetimes.

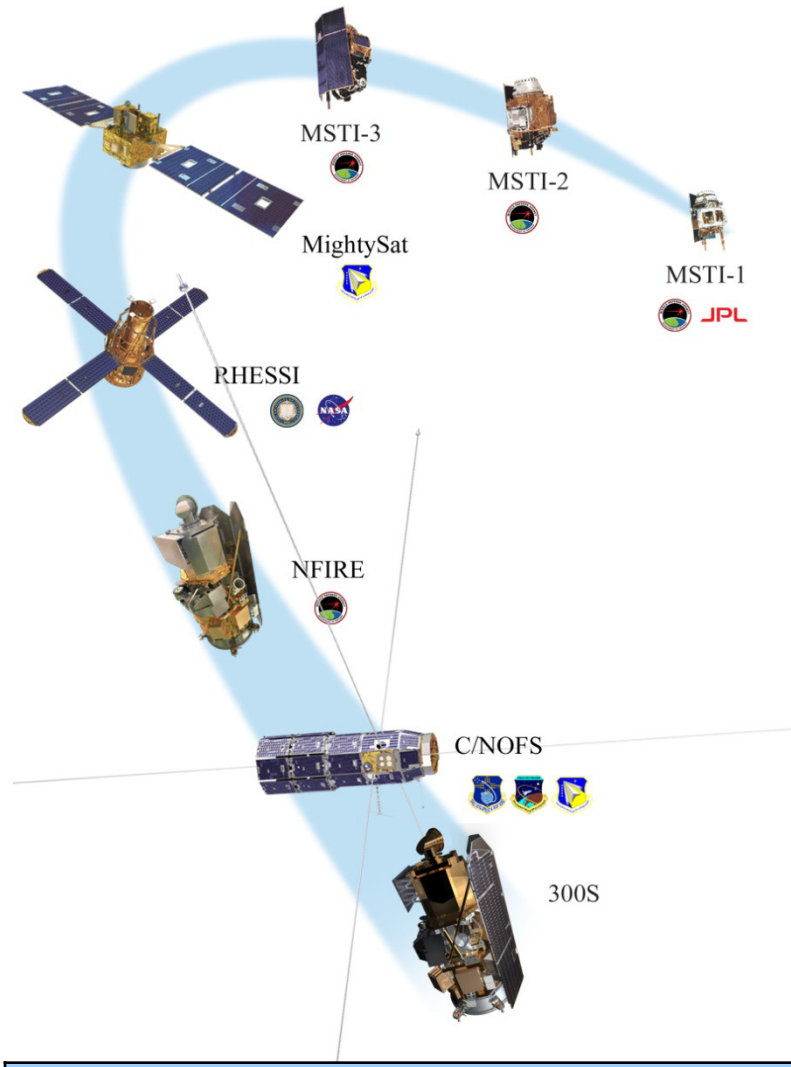

300S Missions

Communications/Navigation Outage Forecasting System (C/NOFS)
Mission: Forecast the Ambient Ionosphere &Scintillations
PLs: Six Ionospheric Sensors
Launch: 2008, Pegasus; Status: Fully Operational

Near Field Infrared Experiment (NFIRE)
Mission: Collect Imagery of Boosting Rockets
PLs: LW/MW/SW IR cameras, Laser Crosslink Terminal
Phenomenology and Plume/Body Discrimination
Launch: 2007, Minotaur; Status: Fully Operational

Reuven Ramaty High Energy Solar Spectroscopic Imager (RHESSI)
Mission: Explore the Basic Physics of Particle Acceleration and Energy Release in Solar Flares
PL: Gamma-ray/X-ray Imaging Spectrometer
Launch: 2002, Pegasus; Status: Fully Operational

MightySat II.1
Mission: Technology Demonstration
PLs: Fourier Transform Hyperspectral Imager and Five Other Spacecraft Technologies
Launch: 2000, Minotaur; Status: Mission Completed

Miniature Sensor Technology Integration-3 (MSTI-3)
Mission: Mid and Short Wave Infrared Phenomenology
PLs: Mid and Short Wave Infrared and Visible Cameras
Launch: 1996, Pegasus; Status: Mission Completed

MSTI-2
Mission: Mid and Short Wave Infrared Tracking Demo
PLs: Mid and Short Wave Infrared Cameras
Launch: 1994, Scout; Status: Mission Completed

MSTI-1
Mission: Short Wave Infrared Phenomenology Collection
PLs: Short Wave Infrared Camera
Launch: 1992, Scout; Status: Mission Completed

Previously Launched 300S Top Level Spacecraft Parameters

Parameter	MSTI-2	MSTI-3	MightySat II.1	RHESSI	NFIRE	C/NOFS
Orbit (km x inclination)	425, 97	425, 97	600, 22	565, 25.6	683, 98	401x867, 12
Design Life (design/goal, mos)	6	12	12	24/36	24	12/36
Redundancy	Single String	Single String	Single String	Single String	Selective	Selective
Propulsion	Hydrazine	Hydrazine	None	None	Hydrazine	None
Payload Mass (kg)	42	54	37	127	91	73
Bus Mass (wet, kg)	120	146	87	164	388	314
Payload Power (watts OAP)	26	40	195	146	72	70
Attitude Knowledge (arcsec, 1σ)	180	12	180	108	5	48
Mission Data Rate (Mbps)	1 (S)	1.2 (S)	1 (S)	4 (S)	51 (X)	1 (S)

300S Specification/Data Sheet

Orbital
Innovation You Can Count On®

300S Spacecraft Description

Command and Data Handling

- RAD-750 and cPCI based Integrated Electronics Module (IEM) for spacecraft operations
- Payload Interface Electronics (PIE) for instrument interface supports data compression
- LVDS and MIL-STD-1553 data bus interfaces provided
- 160 Gbit Solid State Recorder for Payload Data Storage; larger solid state recorders can be accommodated
- Powered on at launch

Communications

- Features both low rate S-Band communications for command and telemetry functions and wideband X-Band communications for mission data downlink
- S-band system is nominally AFSCN SGLS; NASA GN S-band can also be delivered
- X-band mission data rate capability of 40 Mbps
- Commercial command encryption available

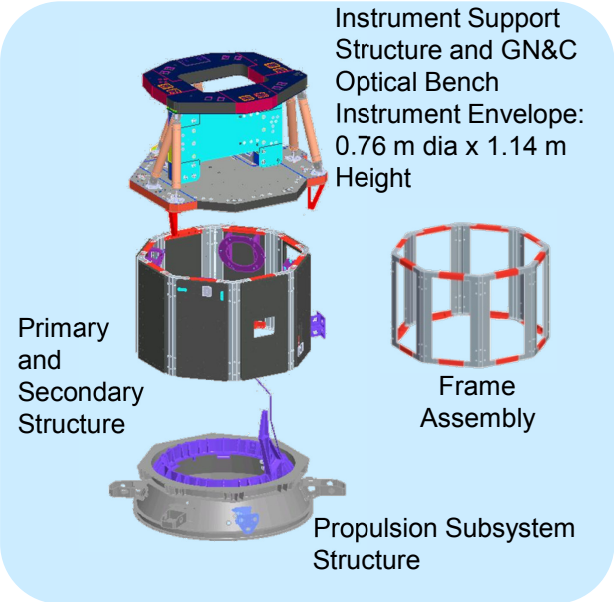

300S Stowed Configuration

The 300S is Compatible with Several Launch Vehicles and Fairing Configurations.

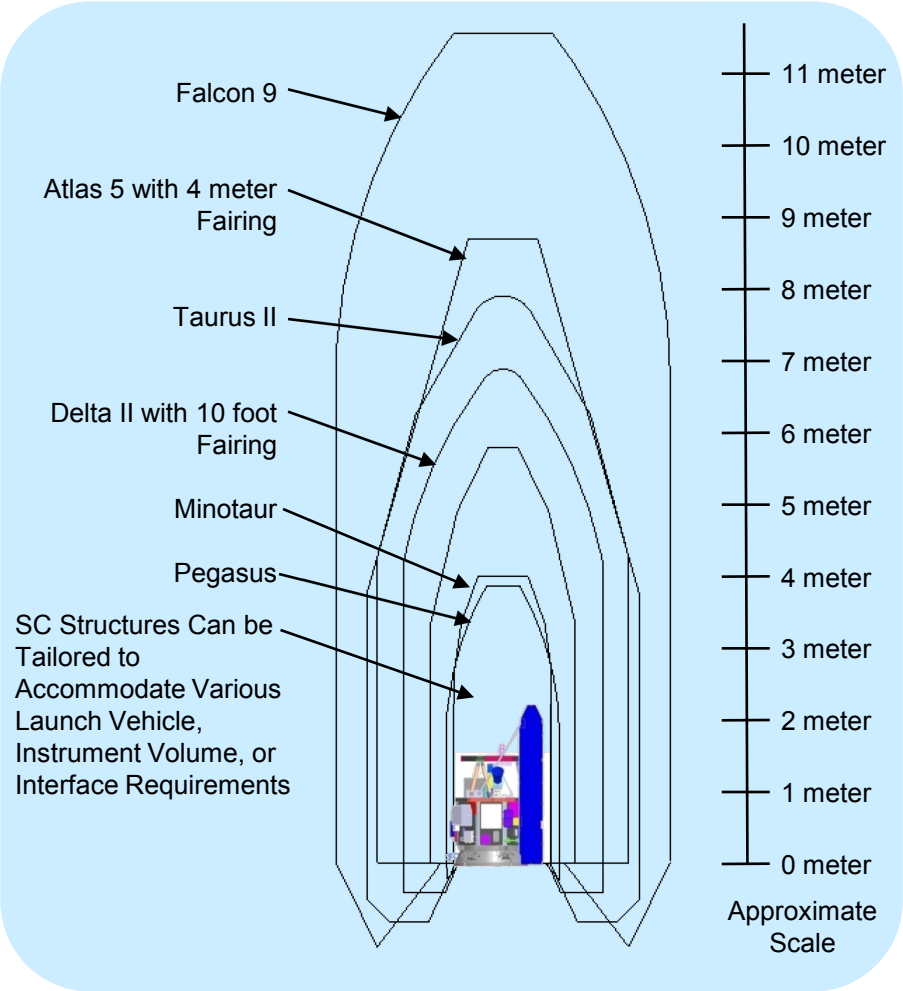

Electrical Power

- Features a direct (solar) energy transfer system with solar array string switching
- Power Distribution Unit (PDU) provides for instrument and spacecraft loads

Structure

- Octagonal, aluminum stringers and aluminum honeycomb panels
- Kinematic, adiabatic instrument interface
- Instrument-mounted attitude reference bench for high accuracy attitude reference data
- Instrument deck panel provides unobstructed field of view for the instrument

Thermal

- Primarily passive design; MLI blankets, paints, and tapes used to control temperatures
- Software controlled heaters provide fine temperature control with thermostatically controlled heaters used as backup

Attitude Control

- Multi-mission functionality
- Utilizes high accuracy star tracker/gyros, GPS
- Zero momentum bias reaction wheels
- Precise pointing and attitude knowledge in any attitude including earth, solar, and inertial, as needed for mission requirements
- Proven attitude control algorithms assure flight performance
- Magnetic momentum unloading

Propulsion

- Monopropellant hydrazine blowdown system
- Designed for multiple orbit raising and lowering maneuvers
- Four 22 N and four 4.5 N thrusters
- Titanium tank with 39 kg propellant; max tank capacity of 114 kg

300S Specification/Data Sheet

Orbital
Innovation You Can Count On®

Contract Baseline Delivery Schedule

Orbital's 300S Contract Baseline Delivery Schedule of 39 months to launch includes six months built in funded slack. With several versions of the 300S spacecraft already produced for a variety of missions, our proposed delivery schedule is proven, robust and low risk.

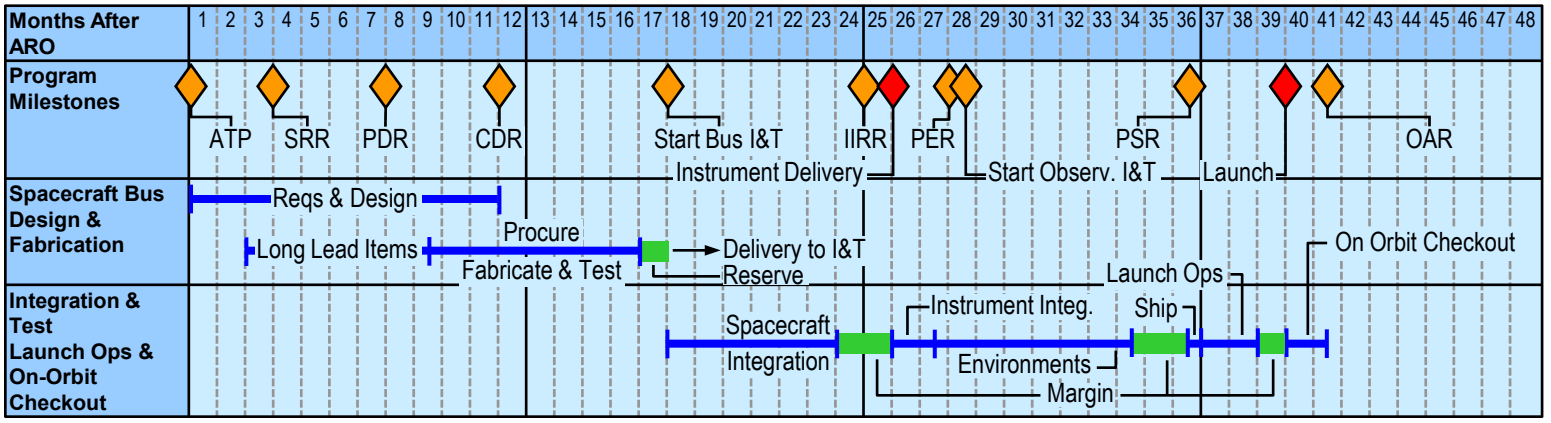

Facilities Overview and Use Plan

Facility	Dulles, VA	Gilbert, AZ
10K Integration Clean Room	Three 800 ft^2 Class 10,000 Clean Rooms	Two 1,800 ft^2 Class 10,000 Clean Rooms
100K Integration Clean Room	22,000 ft^2 Class 100,000 Clean Room	13,000 ft^2 I&T & 7,000 ft^2 Deployment Bay
Propulsion Assy	Yes – Full Integration, Weld and Inspection	No
Dynamics Test	Yes - Largest Capable of 40K lbf	Yes – Largest Capable of 60K lbf
Acoustic Test	Yes, Capable of 145 db OASPL	Yes, Capable of 153 dB OASPL; Simultaneous Vibe & Acoustic
EMC Chamber	Yes - 24' x 20' x 28' high	Yes – 27' x 30' x 21' high
Thermal Vacuum Chambers	Yes - 12' dia X 16' long, Cryogenic Pumps	Yes - 15' dia X 20' long, Cryogenic Pumps

Dulles, VA Satellite Manufacturing Facility

Orbital has two spacecraft development facilities located in Dulles, Virginia, and Gilbert, Arizona. Both feature multiple design teams experienced in the formulation, design, build, test, and operation of NASA and DoD satellites and space hardware. Both facilities have executed a variety of observatory integration (including instrument integration) and environmental test programs. Each features integration, EMI/EMC, dynamics, and thermal vacuum testing all under one roof.

300S spacecraft can be assembled, integrated with their instrument payloads, and tested in either facility.

Gilbert, AZ Satellite Manufacturing Facility

For Additional Information,

Please Contact

Rapid Spacecraft Development Office (RSDO)

NASA Goddard Spacecraft Center

Mail Code 401.1

Greenbelt, MD 20771 USA

Phone: 301-286-1289

Email to: rsdo@rsdo.gsfc.nasa.gov